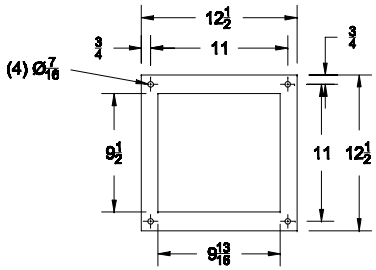

INLET FLANGE DETAIL

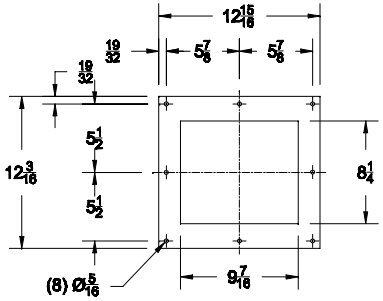

DISCHARGE FLANGE DETAIL

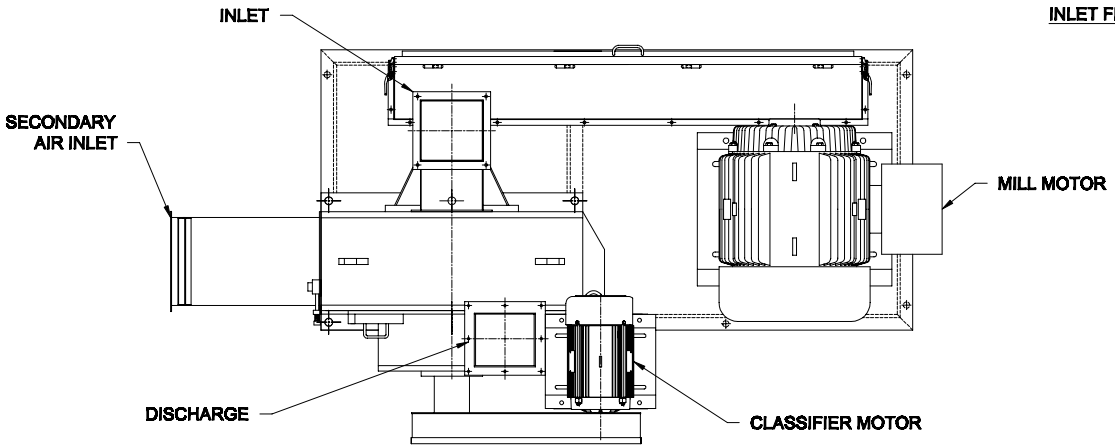

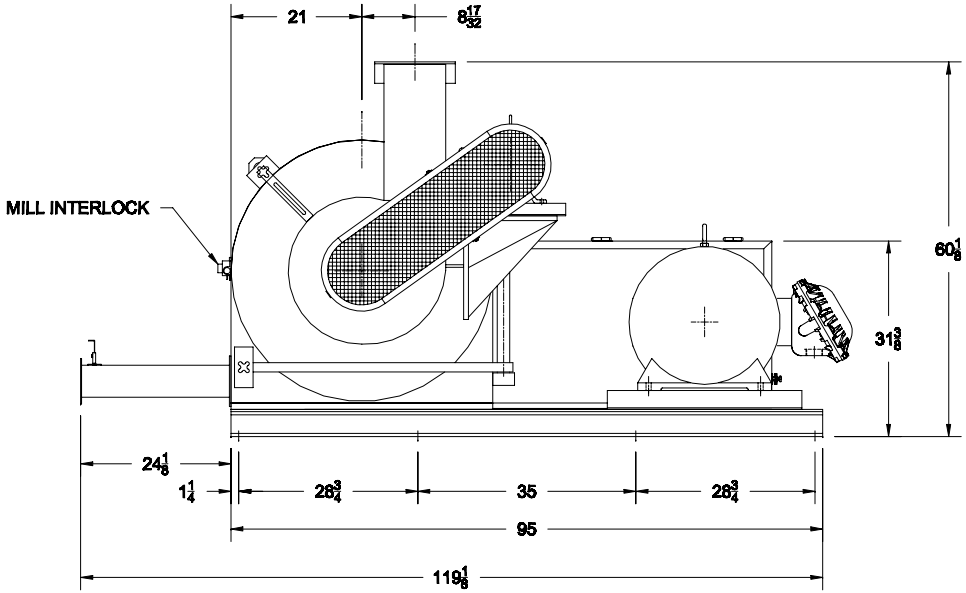

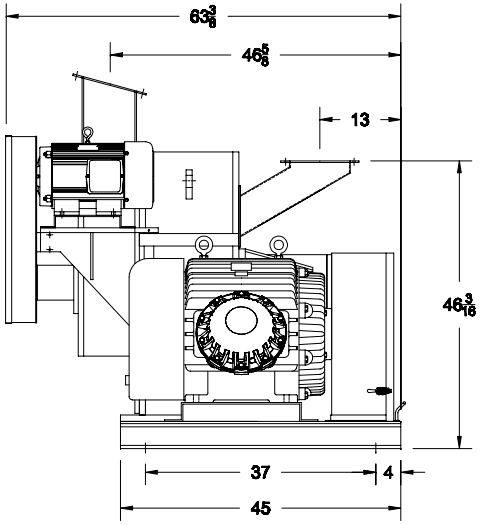

REV	DESCRIPTION	DATE	BY
A	ADDED INTERLOCK	8/22/04	SMG

Prater
THE ASSOCIATED PRATER COMPANIES
2 SAMMONS CT.
BOLINGBROOK, IL 60440

STANDARD CLM-76

CONFIDENTIAL

REFERENCE DRAWING ONLY NOT TO BE USED FOR CONSTRUCTION UNLESS CERTIFIED.

DATE: 8/17/04	BY: SMG	NUMBER: SK-2115-11
SCALE: 1/16" = 1"	APP:	